# CUSTOMER DRAW

RoHS

| LTR | DESCRIPTION | REV. | SIGN | DATE |
|---|---|---|---|---|
| A | - | A0 | | |

SPECIFICATIONS:

1. MECHANICAL :
   1.1 INSERTION FORCE :5N~20N
   1.2 WITHDRAWAL FORCE :8N~20N
   AFTER 10,000 CYCLES MATING: 2N MIN.
2. ELECTRICAL :
   2.1 CONTACT CURRENT RATING: 3A .
   2.2 VOLTAGE RATING :30V AC (rms)
   2.3 WITHSTANDING VOLTAGE: 100 VAC FOR 1 MINUTE.
   INSULATION RESISTANCE: 100 MEGAOHMS MIN.
   2.4 CONTACT RESISTANCE: 40 MILLIOHMS MAX.
3. ENVIRONMENTAL :
   3.1 OPERATING TEMPERATURE:-25°C TO +85°C

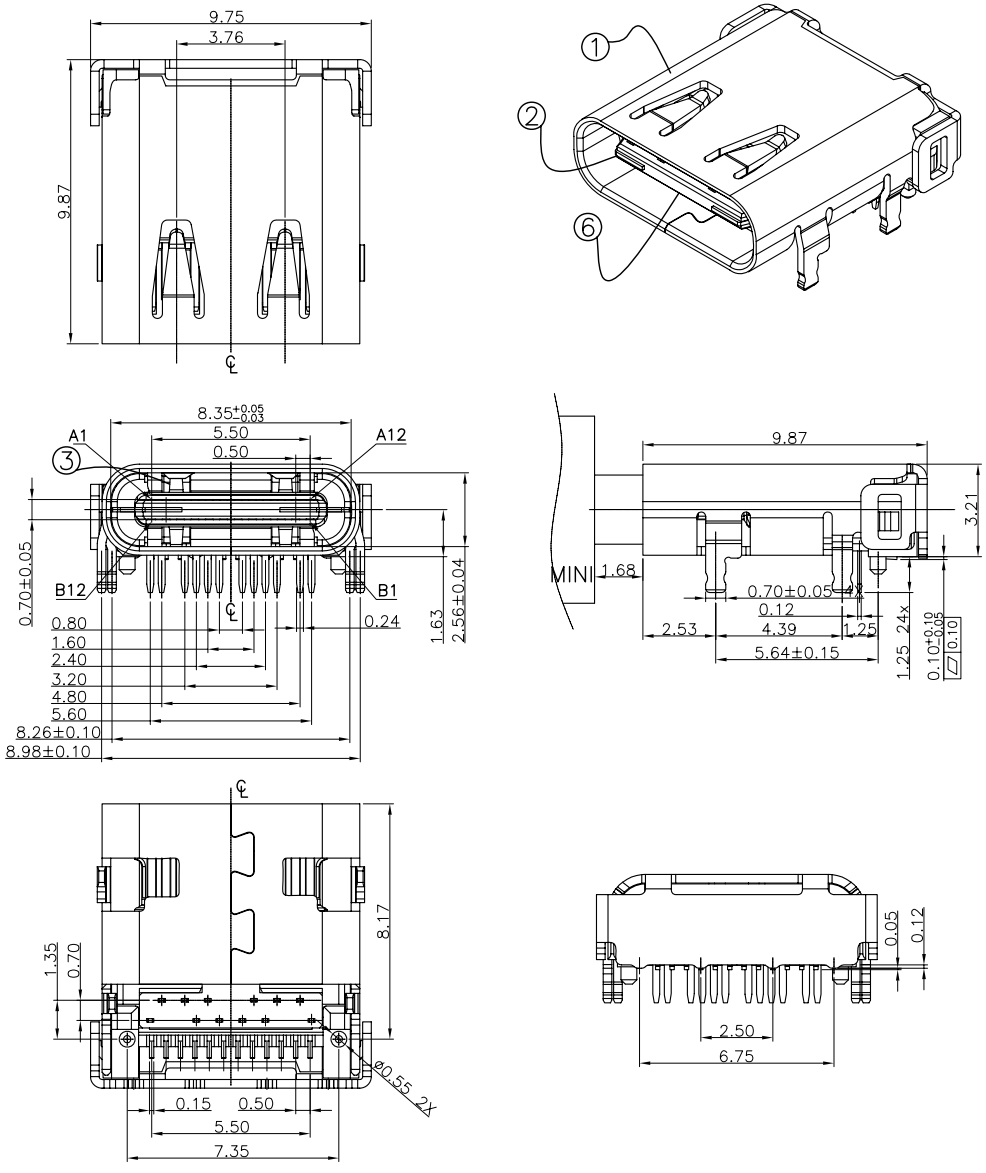


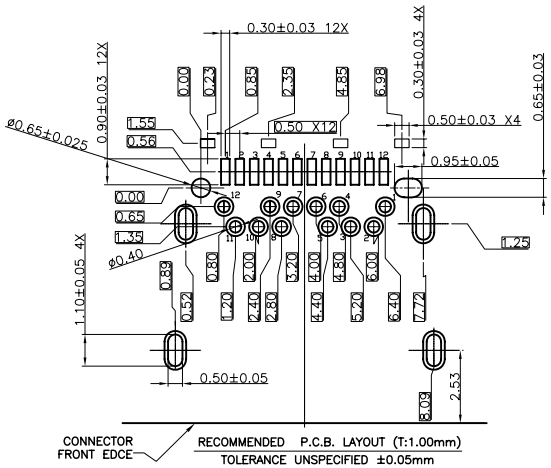


| | A | | B |
|---|---|---|---|
| 1 | GND | 12 | GND |
| 2 | TX+ | 11 | RX- |
| 3 | TX- | 10 | RX+ |
| 4 | VBUS | 9 | PWR |
| 5 | CC | 8 | SBU2 |
| 6 | D- | 7 | D+ |
| 7 | D+ | 6 | D- |
| 8 | SBU1 | 5 | Vconn |
| 9 | VBUS | 4 | PWR |
| 10 | RX+ | 3 | TX+ |
| 11 | RX- | 2 | TX- |
| 12 | GND | 1 | GND |

| QTY'S | MATERIAL | NAME | NO. |
|---|---|---|---|
| 1 | THERMOPLASTIC UL94V-0 | DIP HOUSING | ⑧ |
| 1 | THERMOPLASTIC UL94V-0 | SMT HOUSING | ⑦ |
| 1 | THERMOPLASTIC UL94V-0 | LATCH HOUSING | ⑥ |
| 12 | COPPER ALLOY | DIP CONECTOR | ⑤ |
| 12 | COPPER ALLOY | SMT CONECTOR | ④ |
| 2 | SUS | EMI | ③ |
| 1 | SUS | LATCH | ② |
| 1 | SUS | SHELL | ① |

QUALITY SYMBOLS

▼ .0

Ⓒ .0

GENERAL TOLERANCES (UNLESS SPECIFIED)

| | MM | INCH |
|---|---|---|
| 4 PLACE | ±0.10 | ±---- |
| 3 PLACE | ±0.15 | ±---- |
| 2 PLACE | ±0.20 | ±---- |
| 1 PLACE | ±0.25 | ±---- |
| ANGULAR ± 3° | | |

DRAFT WHERE APPLICABLE MUST REMAIN WITHIN DIMENSIONS

SCALE: 1:1

NUMBER:

MATERAIL:

HRC:

DRAWN BY ELITE_WANG DATE 2014/10/07

CHECKED BY LILI DATE 2014/10/07

APPROVED BY DATE 2014/10/07

DSHconn

SHENZHEN DSHCONN TECHNOLOGY CO.,LTD.

TITLE: USB TYPE C FEMALE R/A SMT COVER TYPE

THIRD ANGLE PROJECTION

REVISE ON CAD ONLY

PART NO. 908224951431

DWG NO. 908224951431

SHEET NO. 1/1

THIS DRAWING CONTAINS INFORMATION THAT IS PROPRIETAPY TO DSHCONN INCORPORATED AND SHOULD NOT BE USED WITHOUT WRITTEN PERMISSION

A4